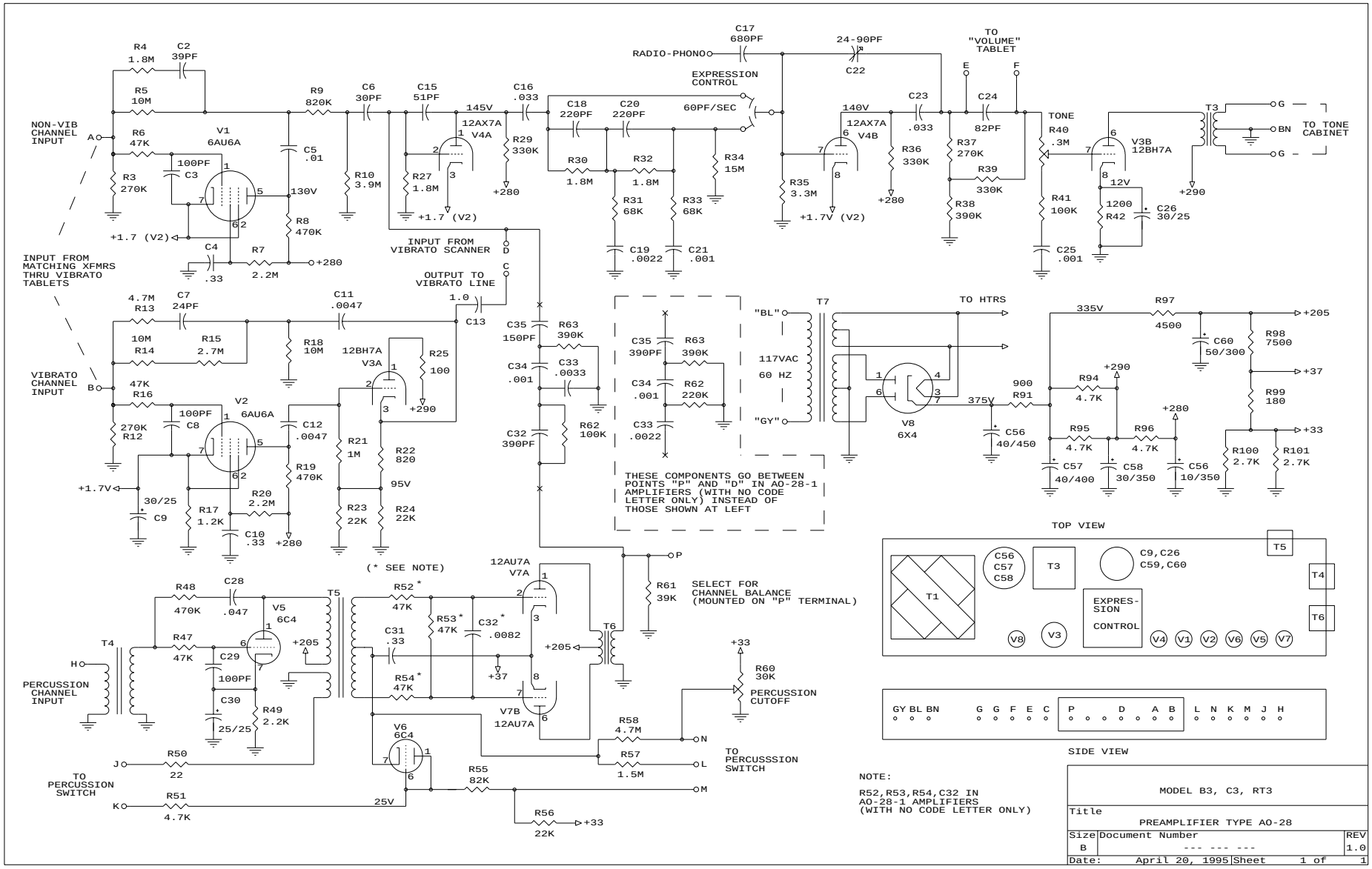
NON-VIB CHANNEL INPUT
INPUT FROM MATCHING XFMRS THRU VIBRATO TABLETS
VIBRATO CHANNEL INPUT
PERCUSSION CHANNEL INPUT
TO PERCUSSION SWITCH
INPUT FROM VIBRATO SCANNER
OUTPUT TO VIBRATO LINE
RADIO-PHONO
EXPRESSION CONTROL
60PF/SEC
TO "VOLUME" TABLET
TONE
TO TONE CABINET
TO HTRS
117VAC 60 HZ
THESE COMPONENTS GO BETWEEN POINTS "P" AND "D" IN AO-28-1 AMPLIFIERS (WITH NO CODE LETTER ONLY) INSTEAD OF THOSE SHOWN AT LEFT
(* SEE NOTE)
SELECT FOR CHANNEL BALANCE (MOUNTED ON "P" TERMINAL)
PERCUSSION CUTOFF
TO PERCUSSSION SWITCH
TOP VIEW
SIDE VIEW
EXPRES-SION CONTROL
NOTE:
R52,R53,R54,C32 IN AO-28-1 AMPLIFIERS (WITH NO CODE LETTER ONLY)
MODEL B3, C3, RT3
Title
PREAMPLIFIER TYPE AO-28
Size B
Document Number --- --- ---
REV 1.0
Date: April 20, 1995
Sheet 1 of 1